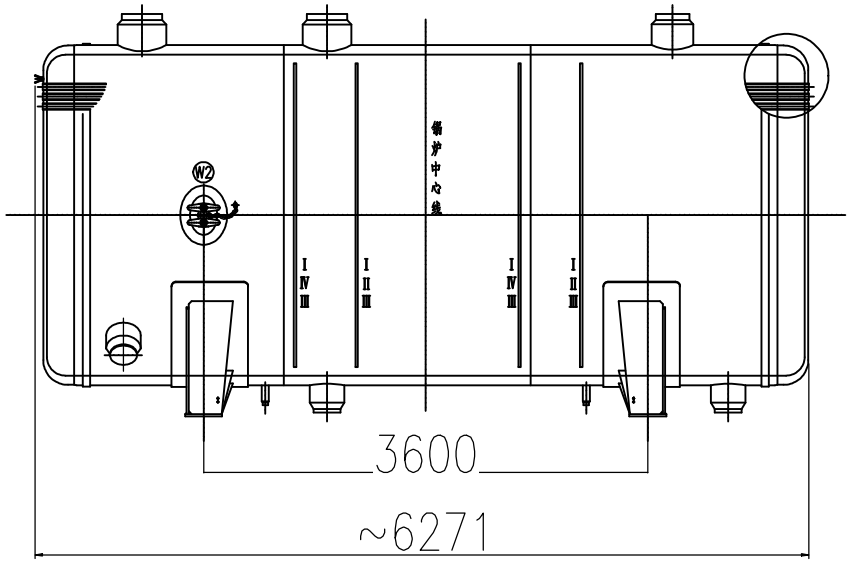

A－A

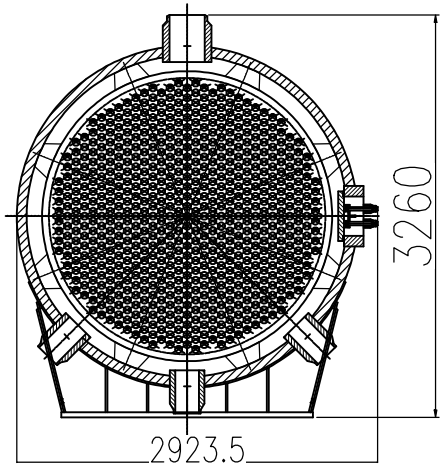

					江苏索普赛瑞装备制造有限公司 SOPO CERE Equipment Manufacturing Co., Ltd.		
MARK 标记	TOTAL NO. 处数	FILE NO. 更改文件号		SIGN 签名	DATE 日期		锅壳Ⅱ Dn2600
DESIGN 设计			TECH REVIEW 工艺			WEIGHT(kg) 重量 / SCALE 比例 / REV. 版次	
CHECK 校对			APPROVE 批准				11SCG2301-3-0
REVIEW 审核						TOTAL-PAGES 共 张 / No.-PAGE 第 张	

本图纸及图纸上所载资料属于江苏索普赛瑞装备制造有限公司所有，任何单位或个人未经江苏索普赛瑞装备制造有限公司书面许可，不得以任何方式复制或披露给第三方，违者将追究相关法律责任。
THIS DRAWING AND RELEVANT DOCUMENT'S COPYRIGHT BELONGS TO SOPO CERE EQUIPMENT MANUFACTURING CO., LTD. THEY MAY NOT BE REPRODUCED OR DISCLOSED TO ANY THIRD PARTY IN ANY FORM WITHOUT THE PRIOR WRITTEN PERMISSION OF SOPO CERE EQUIPMENT MANUFACTURING CO., LTD. THE OFFENDERS SHALL BEAR THE CORRESPONDING LEGAL RESPONSIBILITY.